HDMI Extender Kit, PoE, HDBT, UHD-4K
500451-PoE

Overview

The HDMI Extender Kit (500451-PoE) allows HDMI equipment to be connected up to 131ft (40m) at 4K/30 (4:4:4) or 4K/60 (4:2:0) resolutions, or 230 ft (70 m) at resolutions up to 1080p via one (1) Cat 5e/6 unshielded twisted pair cable in a point-to-point configuration. For ease of cabling the extender kit features PoE (PD), including PoC, on both the transmitter and receiver. This kit comes with one (1) transmitter, one (1) receiver, one (1) IR Emitter, and one (1) IR sensor.

Applications

Digital signage, commercial AV systems, classroom projector systems, boardroom systems, collaborative PC systems, medical information systems.

Key Features

- Supports 1080p deep color and full 3D to distances of up to 230 ft (70m) over single Cat5e/6
- Supports 4K @ 24/25/30Hz (4:4:4) and 4K/60 (4:2:0) to distances of up to 131 ft (40m) over single Cat5e/6
- Supports Bi-directional IR pass through
- Supports all digital audio modes
- PoE (PD) & PoC on both the transmitter and receiver
- Includes IR emitter and IR sensor (carrier-wave)
- Compatible with 500451 (non PoE version)

Specification Chart	
Environment	HDMI 1.4a (3D)
Devices	DVDs, Blu-ray players, projectors, monitors, TVs, PCs, laptops, servers supporting HDMI.
Transmission	Transparent to the user
Bandwidth	340MHz
Signals	HDMI 1.4a protocol
Connectors *Cables not included*	One (1) HDMI receptacle. One (1) RJ45S for Cat5e/6 unshielded or shielded twisted pair. Two (2) 3.5mm sockets for IR Sensor & Emitter (carrier-wave)
Max. Distance* **Based on a maximum length of 6.6 ft (2m) of HDMI cable per end*	4K/30 (4:4:4): Cat 5e/6: 131ft (40m) 4K/60 (4:2:0): Cat 5e/6: 131ft (40m) 1080p: Cat 5e/6: 230ft (70m) 1080p Deep Color: Cat 5e/6: 230ft (70m) *When installed in an electrically noisy environment, STP cable must be used. Also, cross-connection reduces the effective distance depending on the grade of twisted cable used.*
RJ45 Pin Configuration *Reverse Polarity Sensitive* *Use EIA/TIA 568 A or B, straight-through wiring.*	RJ45 Pin 1 (R) Pin 2 (T) Pin 3 (R) Pin 6 (T) Pin 4 (R) Pin 5 (T) Pin 7 (R) Pin 8 (T) 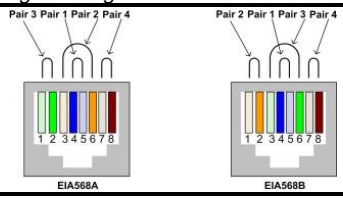
Cable	One (1) Category 5e or better twisted pair cables required.
Power Supply	One (1) 110-240V/48VDC power supply with interchangeable blades
Power Consumption	Transmitter: 1.6 Watt Receiver: 3.2 Watt
Temperature	Operating: 0º to 40º C. Storage:-20º to 85º C. Humidity: up to 95% non-condensing.
Enclosure	Metal
Dimensions	4.40" x 3.00" x 1.00" (11.2 x 7.6 x 2.5 cm)
Weight	1.4 lbs (.6 kg)
Compliance	Regulatory: FCC, CE, RoHS
Warranty	2 years
Order Information	500451-PoE , HDMI Extender Kit, PoE, HDBT, UHD-4K (UPC: 627699044513) 500451-PoE-RX, HDMI Receiver, PoE, HDBT, UHD-4K (UPC: 627699844519)
Accessories	500905 Rackmount Transceiver Chassis 3 Port 500920 Rackmount Transceiver Chassis 16 Port

Typical Application Schematic

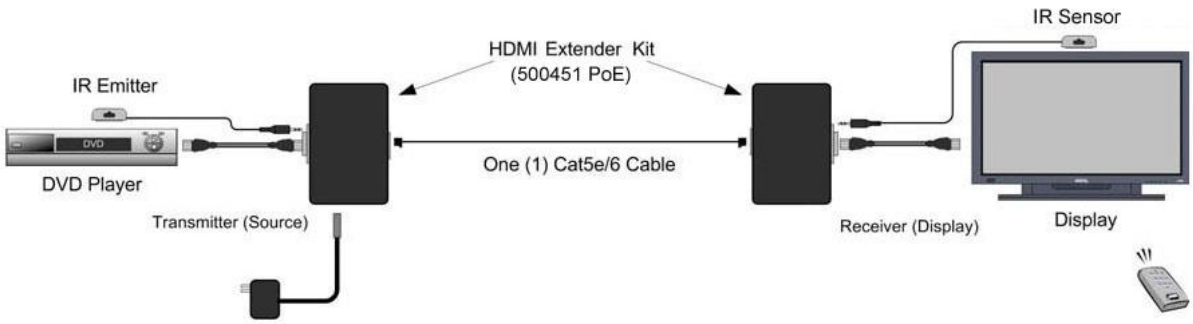

© MuxLab Inc. 2017

MuxLab Inc. | 8495 Dalton Road, Mount Royal, Quebec, Canada, H4T 1V5
Tel: (514) 905 0588 | Fax: (514) 905 0589 | Toll Free:1 877 689-5228
E-mail: videoease@muxlab.com | www.muxlab.com